NANORACK ROOF TOP PV MOUNTING SYSTEM

THIS PRODUCT HAS BEEN DESIGNED AND TESTED TO COMPLY WITH THE REQUIREMENTS OF THE 2026 (9TH EDITION) FLORIDA BUILDING CODE INCLUDING HIGH VELOCITY HURRICANE ZONES (HVHZ).

THIS PRODUCT APPROVAL IS FOR THE ROOF TOP PV MOUNTING SYSTEM AS SHOWN ON THESE DRAWINGS. ROOF DETAILS, UPLIFT, SLOPE, ROOF TRUSSES AND OTHER ELEMENTS SHALL BE DESIGNED BY A FLORIDA REGISTERED ENGINEER AND REVIEWED BY THE STRUCTURAL PLANS EXAMINER OF THE CORRESPONDING BUILDING DEPARTMENT.

ENGINEER OF RECORD TO VERIFY THAT ROOF MEMBERS CAN SUPPORT THE PV MODULE ARRAY UNDER ALL CODE LEVEL LOADING CONDITIONS. INSTALLER TO MAINTAIN THE WATERPROOF INTEGRITY OF THE ROOF.

INSTALLATION OF PV MODULE ACCESSORIES SHALL BE DONE IN ACCORDANCE WITH THE CURRENT EDITION OF FLORIDA BUILDING CODE AND THE MANUFACTURER'S INSTALLATION INSTRUCTIONS.

ANCHORS SHALL BE CORROSION RESISTANT, PER FBC SECTION 1711, SPACED AS SHOWN ON DETAILS
AND INSTALLED PER THE MANUFACTURER'S INSTRUCTIONS. SPECIFIED EMBEDMENT TO BASE MATERIAL SHALL BE BEYOND ROOF COVERING.

DESIGN LOADS SHOWN ARE BASED ON 'ALLOWABLE STRESS DESIGN (ASD)'.

SOLAR MODULES TO BE INSTALLED PARALLEL TO THE ROOF SURFACE WITH A TOLERANCE OF LESS THAN 2 DEGREES.

MAXIMUM ROOF SLOPE TO BE 45 DEGREES.

CONDITIONS NOT SHOWN IN THIS DRAWING ARE TO BE ANALYZED SEPARATELY, AND TO BE REVIEWED BY THE BUILDING OFFICIAL.

CORROSION RESISTANCE - SALTWATER ENVIRONMENTS

1. FOR INSTALLATIONS WITHIN 3,000 FT OF A SALTWATER COASTLINE, ALL EXPOSED INSTALLATION SCREWS, BOLTS, LAG SCREWS, NUTS AND WASHERS FURNISHED AS PART OF THIS SYSTEM SHALL BE ASTM A240 TYPE 304, TYPE 305 OR TYPE 316 STAINLESS STEEL. SUNMODO SPECIFIES THE SAME COMPLIANT STAINLESS-STEEL CONFIGURATION THROUGHOUT THE 0-3,000 FT COASTAL ZONE.

2. RACKING COMPONENTS ARE NONFERROUS ALUMINUM WITH ALLOY/TEMPER AND CORROSION-RESISTANT FINISH OR MATERIAL AS IDENTIFIED IN THE COMPONENT SCHEDULES.

3. FASTENERS AND CONTACTING METAL COMPONENTS SHALL HAVE MANUFACTURER-APPROVED COMPATIBLE COMPOSITIONS AND FINISHES IN ACCORDANCE WITH FBC SECTION 1711.1.1.3. MAINTAIN BONDING AND GROUNDING IN ACCORDANCE WITH THE SYSTEM'S UL 2703 LISTING AND INSTALLATION INSTRUCTIONS.

Joel R Hartman

This item has been digitally signed and sealed by Joel R. Hartman on the date adjacent to the seal. Printed copies of this document are not considered signed and sealed and the signature must be verified on any electronic copies.

PV MODULES ARE NOT PART OF THIS APPROVAL. FOR PANEL DETAILS, GENERAL NOTES, COMPONENT SIZES, FIRE AND ELECTRICAL SAFETY STANDARDS AND INSTALLATION REQUIREMENTS / LIMITATIONS SEE CORRESPONDING FLORIDA APPROVAL DRAWINGS.

A- CONTRACTOR TO BE RESPONSIBLE FOR THE SELECTION, PURCHASE AND INSTALLATION OF THE PRODUCT BASED ON THIS PRODUCT EVALUATION PROVIDED HE / SHE DOES NOT DEVIATE FROM THE CONDITIONS DETAILED ON THIS DOCUMENT.

B- THIS PRODUCT EVALUATION DOCUMENT (P.E.D.) WILL BE CONSIDERED INVALID IF ALTERED BY ANY MEANS.

C- SITE SPECIFIC PROJECTS SHALL BE PREPARED BY A FLORIDA REGISTERED ENGINEER OR ARCHITECT WHICH WILL BECOME THE ENGINEER OF RECORD (E.O.R.) FOR THE PROJECT AND WHO WILL BE RESPONSIBLE FOR THE PROPER USE OF THE P.E.D.

D- THIS P.E.D. SHALL BEAR THE DATE AND ORIGINAL SEAL AND SIGNATURE OF THE PROFESSIONAL ENGINEER OF RECORD THAT PREPARED IT.

8/25/2026 9:30 AM

DATE: 8/18/26	ENG: SAW	DWN: SAW	CHK: JRH
REV: #	DATE	BY:	DESCRIPTION
1	04/24/24	MIH	NANOPLUS MOUNT

VECTOR ENGINEERS®
DRAPER, UTAH
(801) 990-0175
WWW.VECTORSE.COM

Copyright © 2026
Vector Structural Engineering, LLC
This drawing contains proprietary information belonging to Vector Structural Engineering, LLC. and may be neither wholly nor partially copied or reproduced without the prior written permission of Vector Structural Engineering, LLC.

SUNMODO CORP
NANORACK PV MOUNTING SYSTEM
14800 NE 65TH ST
VANCOUVER, WA 98682

JOEL R. HARTMAN
LICENSE
No. 94174
STATE OF FLORIDA
PROFESSIONAL ENGINEER
08/25/2026
JOEL HARTMAN
LICENSE #: 94174

U2716.0410.261

SHEET 1 OF 7

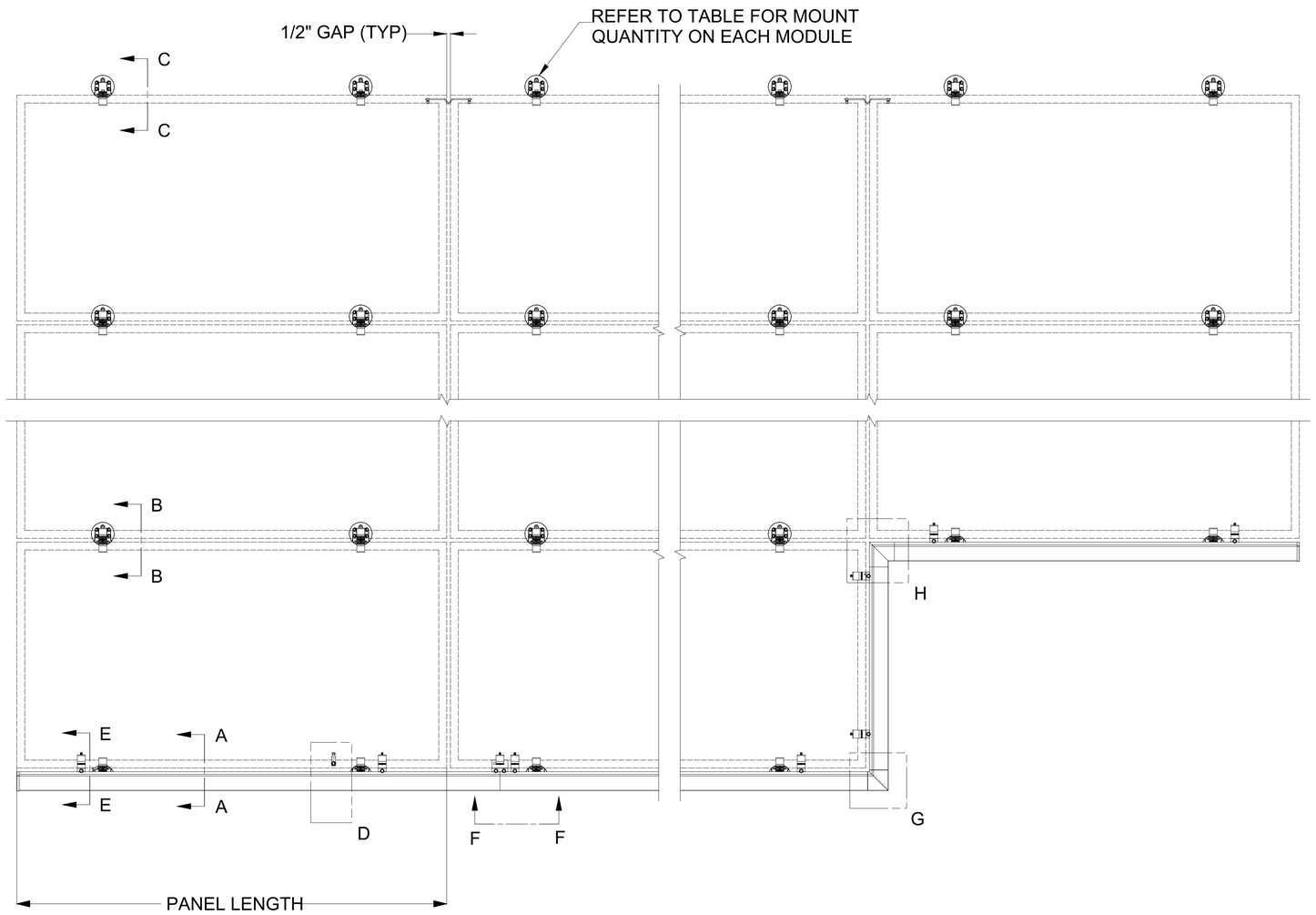

LONG SIDE CLAMPING PLAN VIEW

DESIGN PRESSURE (PSF)			
SHEATHING MATERIAL	# MOUNTS PER MODULE	DESIGN PRESSURE 4 FASTENERS	DESIGN PRESSURE 5 FASTENERS
MIN 15/32" PLYWOOD	4	41	61
	6	60	90
	8	78	116

NOTES:

SEE BELOW SKETCHES FOR MOUNT SPACING. TOLERANCE FOR MOUNT SPACING SHALL NOT EXCEED +/- 1". PANEL OVERHANG SHALL NOT EXCEED PANEL MANUFACTURER'S SPECIFICATIONS.

DESIGN LOAD SHOWN IN THE TABLE ARE FOR 72 CELL PANELS (39.5" X 79"). DESIGN LOAD FOR DIFFERENT SIZED MODULES MAY BE CALCULATED AS FOLLOWS:

DESIGN LOAD = LOAD FROM TABLE X (39.5"/NEW PANEL WIDTH) X (79"/NEW PANEL LENGTH).

ARRAY SKIRT MAY BE OMITTED WITH THE USE OF ONE GROUND LUG PER COLUMN OF MODULES FOR PROPER BONDING & GROUNDING.

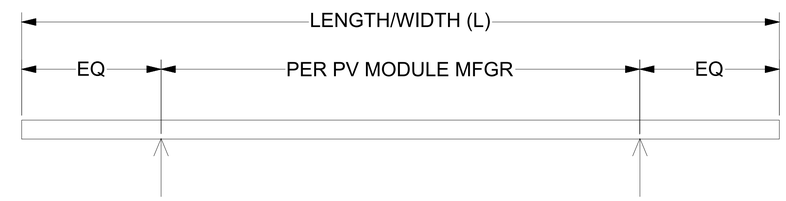

MOUNT SPACING: 4 MOUNTS PER PANEL

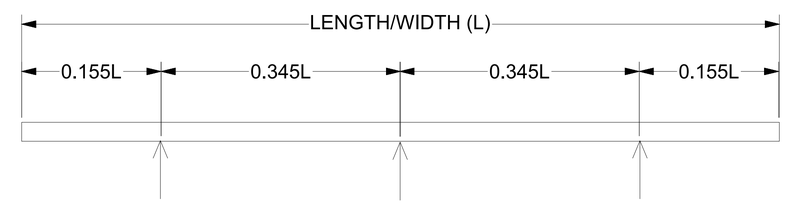

MOUNT SPACING: 6 MOUNTS PER PANEL

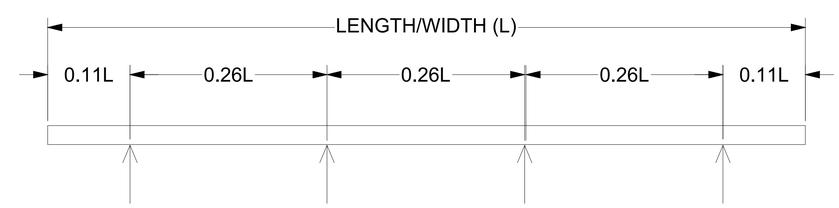

MOUNT SPACING: 8 MOUNTS PER PANEL

This item has been digitally signed and sealed by Joel R. Hartman on the date adjacent to the seal. Printed copies of this document are not considered signed and sealed and the signature must be verified on any electronic copies.

8/25/2026 9:30 AM

DATE: 8/18/26	ENG: SAW	DWN: SAW	CHK: JRH
REV: #	DATE	BY:	DESCRIPTION
1	04/24/24	MIH	NANOPLUS MOUNT

VECTOR ENGINEERS®
DRAPER, UTAH
(801) 990-1775
WWW.VECTORSE.COM

Copyright © 2026
Vector Structural Engineering, LLC
This drawing contains proprietary information belonging to Vector Structural Engineering, LLC, and may be neither wholly nor partially copied or reproduced without the prior written permission of Vector Structural Engineering, LLC.

SUNMODO CORP
NANORACK PV MOUNTING SYSTEM
14800 NE 65TH ST
VANCOUVER, WA 98682

JOEL R. HARTMAN
LICENSE
No. 94174
STATE OF FLORIDA
PROFESSIONAL ENGINEER
08/25/2026
JOEL HARTMAN
LICENSE #: 94174

U2716.0410.261

SHEET 2 OF 7

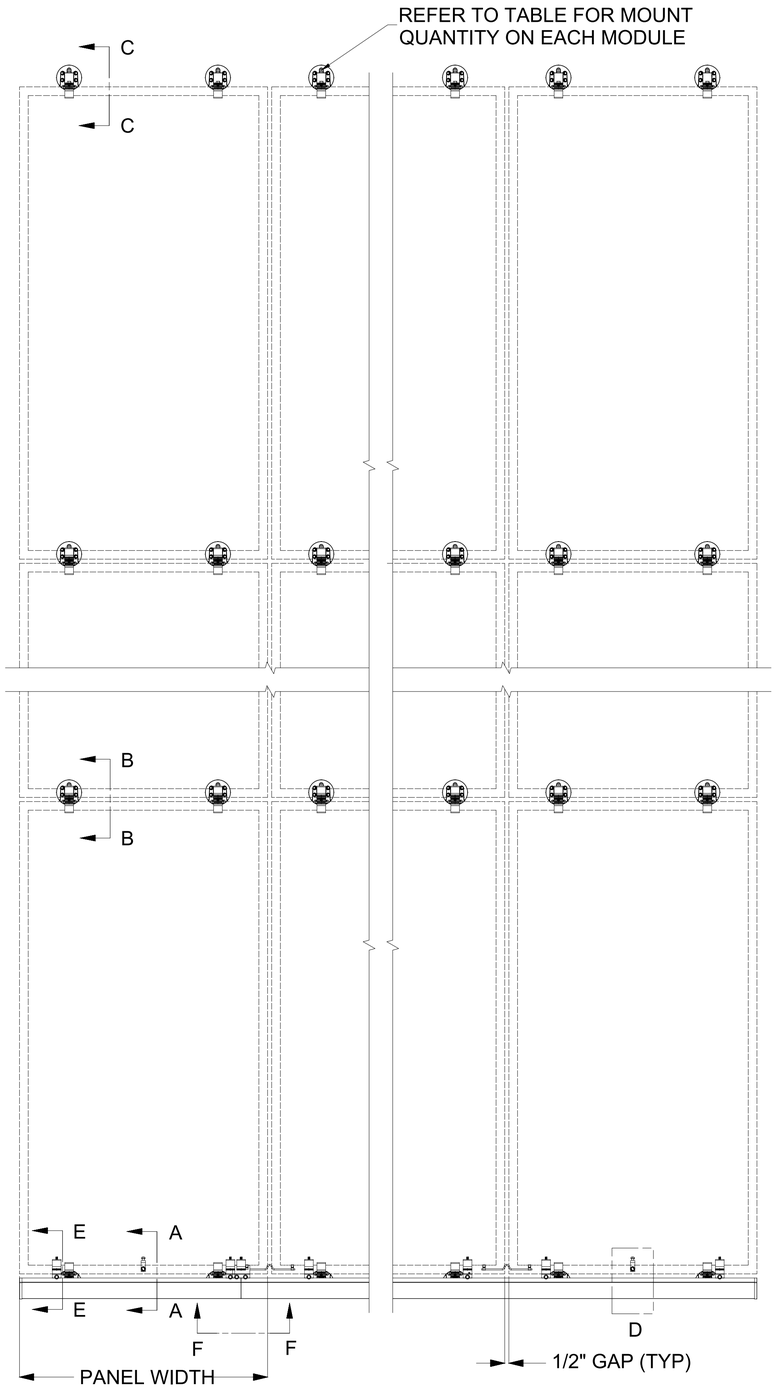

SHORT SIDE CLAMPING PLAN VIEW

DESIGN PRESSURE (PSF)			
SHEATHING MATERIAL	# MOUNTS PER MODULE	DESIGN PRESSURE 4 FASTENERS	DESIGN PRESSURE 5 FASTENERS
MIN 15/32" PLYWOOD	4	41	61
	6	60	90
	8	78	116

NOTES:

SEE BELOW SKETCHES FOR MOUNT SPACING. TOLERANCE FOR MOUNT SPACING SHALL NOT EXCEED +/- 1". PANEL OVERHANG SHALL NOT EXCEED PANEL MANUFACTURER'S SPECIFICATIONS.

DESIGN LOAD SHOWN IN THE TABLE ARE FOR 72 CELL PANELS (39.5" X 79"). DESIGN LOAD FOR DIFFERENT SIZED MODULES MAY BE CALCULATED AS FOLLOWS:

DESIGN LOAD = LOAD FROM TABLE X (39.5"/NEW PANEL WIDTH) X (79"/NEW PANEL LENGTH).

ARRAY SKIRT MAY BE OMITTED WITH THE USE OF ONE GROUND LUG PER COLUMN OF MODULES FOR PROPER BONDING & GROUNDING.

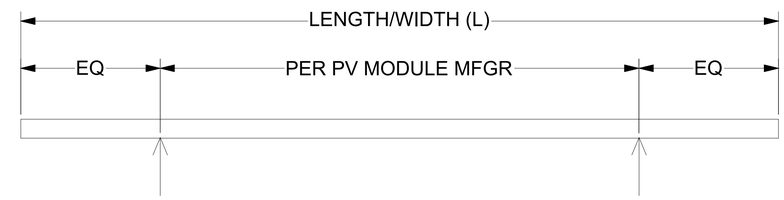

MOUNT SPACING: 4 MOUNTS PER PANEL

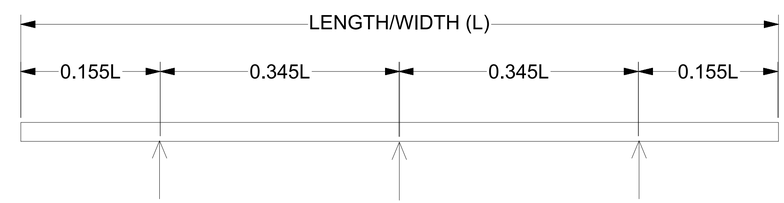

MOUNT SPACING: 6 MOUNTS PER PANEL

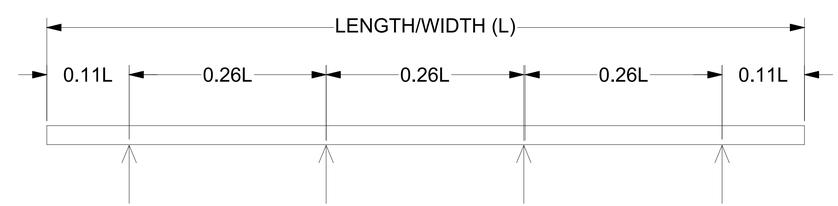

MOUNT SPACING: 8 MOUNTS PER PANEL

This item has been digitally signed and sealed by Joel R. Hartman on the date adjacent to the seal. Printed copies of this document are not considered signed and sealed and the signature must be verified on any electronic copies.

DATE: 8/18/26	ENG: SAW	DWN: SAW	CHK: JRH
REV: #	DATE	BY:	DESCRIPTION
1	04/24/24	MIH	NANOPLUS MOUNT

VECTOR ENGINEERS®
DRAPER, UTAH
(801) 990-1775
WWW.VECTORSE.COM

Copyright © 2026
Vector Structural Engineering, LLC
This drawing contains proprietary information belonging to Vector Structural Engineering, LLC. and may be neither wholly nor partially copied or reproduced without the prior written permission of Vector Structural Engineering, LLC.

SUNMODO CORP
NANORACK PV MOUNTING SYSTEM
14800 NE 65TH ST
VANCOUVER, WA 98682

JOEL R. HARTMAN
LICENSE
No. 94174
STATE OF FLORIDA
PROFESSIONAL ENGINEER
08/25/2026
JOEL HARTMAN
LICENSE #: 94174

U2716.0410.261

SHEET 3 OF 7

8/25/2026 9:30 AM

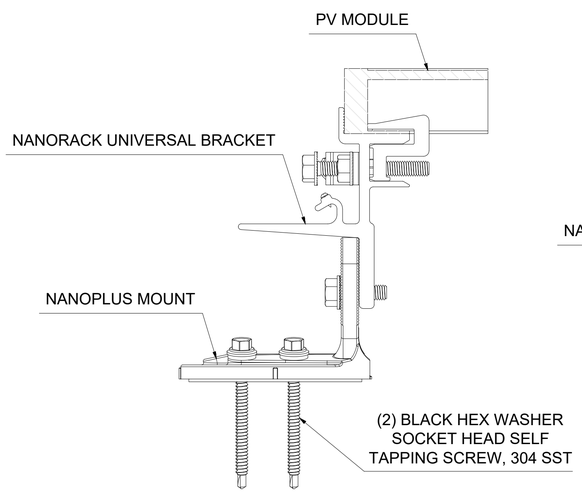

SECTION A-A

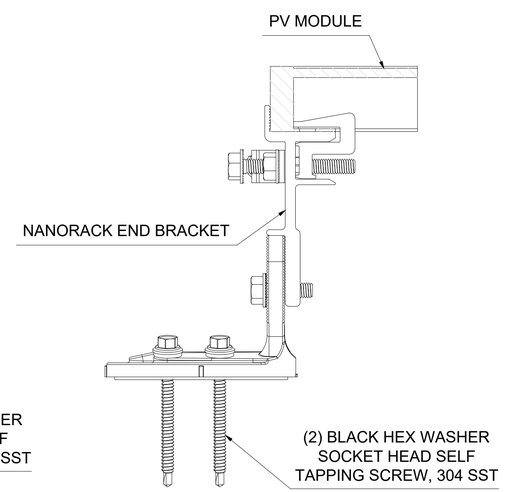

SECTION A-A
(ALTERNATE)

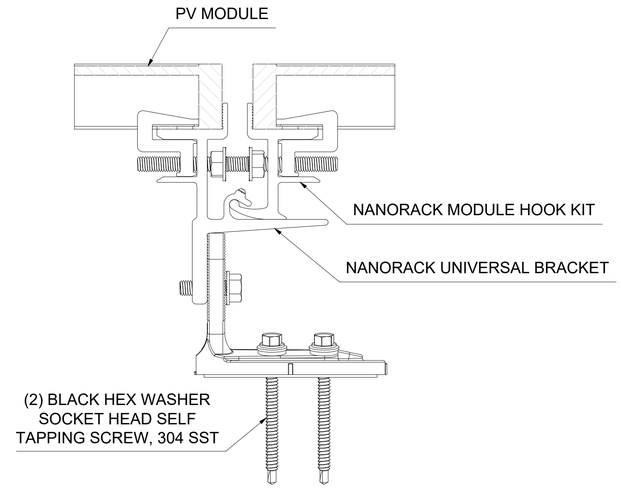

SECTION B-B

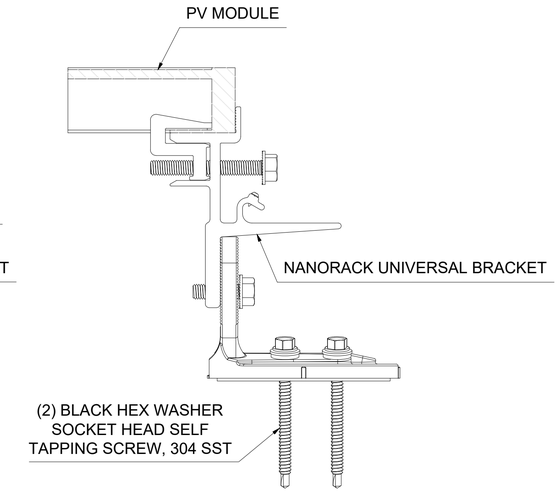

SECTION C-C

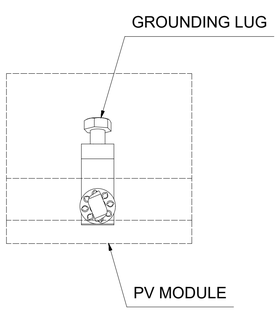

DETAIL D

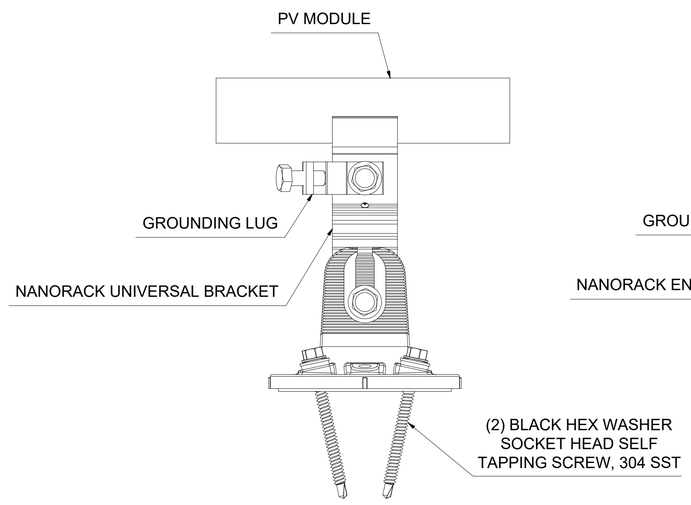

ALTERNATE
GROUNDING LUG
LOCATION

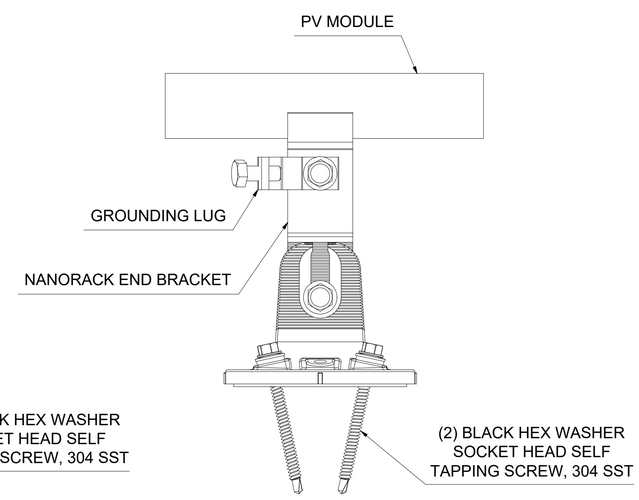

ALTERNATE
GROUNDING LUG
LOCATION

REV: #	DATE	BY:	DESCRIPTION
1	04/24/24	MIH	NANOPLUS MOUNT

DATE: 8/18/26 ENG: SAW DWN: SAW CHK: JRH

VECTOR ENGINEERS®
DRAPER, UTAH
(801) 990-1775
WWW.VECTORSE.COM

Copyright © 2026
Vector Structural Engineering, LLC
This drawing contains proprietary information belonging to Vector Structural Engineering, LLC, and may be neither wholly nor partially copied or reproduced without the prior written permission of Vector Structural Engineering, LLC.

SUNMODO CORP
NANORACK PV MOUNTING SYSTEM
14800 NE 65TH ST
VANCOUVER, WA 98682

JOEL R. HARTMAN
LICENSE
No. 94174
STATE OF FLORIDA
PROFESSIONAL ENGINEER
08/25/2026
JOEL HARTMAN
LICENSE #: 94174

U2716.0410.261

SHEET 4 OF 7

This item has been digitally signed and sealed by Joel R. Hartman on the date adjacent to the seal. Printed copies of this document are not considered signed and sealed and the signature must be verified on any electronic copies.

8/25/2026 9:30 AM

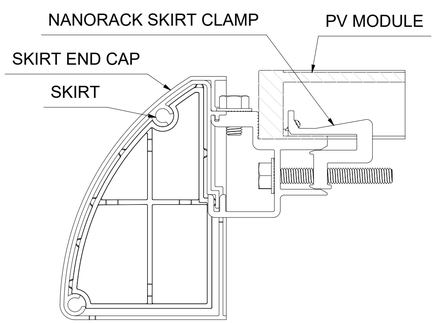

SECTION E-E

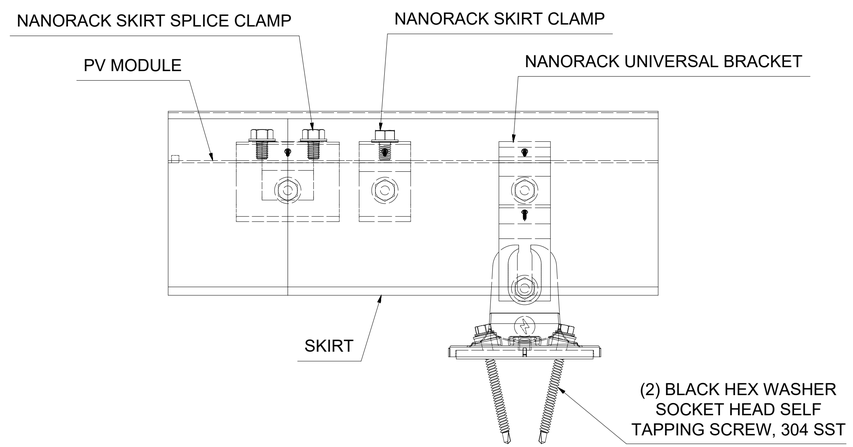

VIEW F-F

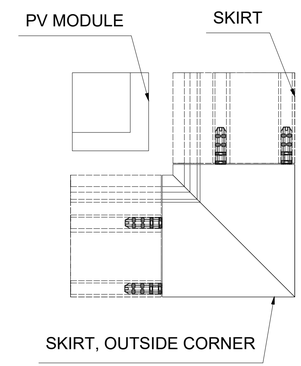

DETAIL G

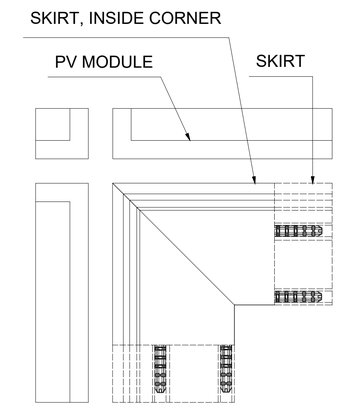

DETAIL H

DATE: 8/18/26	ENG: SAW	DWN: SAW	CHK: JRH
REV: #	DATE	BY:	DESCRIPTION
1	04/24/24	MIH	NANOPLUS MOUNT

VECTOR ENGINEERS®
DRAPER, UTAH
(801) 990-1775
WWW.VECTORSE.COM

Copyright © 2026
Vector Structural Engineering, LLC
This drawing contains proprietary information belonging to Vector Structural Engineering, LLC. and may be neither wholly nor partially copied or reproduced without the prior written permission of Vector Structural Engineering, LLC.

SUNMODO CORP
NANORACK PV MOUNTING SYSTEM
14800 NE 65TH ST
VANCOUVER, WA 98682

JOEL R. HARTMAN
LICENSE
No. 94174
STATE OF FLORIDA
PROFESSIONAL ENGINEER
08/25/2026
JOEL HARTMAN
LICENSE #: 94174

U2716.0410.261

SHEET 5 OF 7

This item has been digitally signed and sealed by Joel R. Hartman on the date adjacent to the seal. Printed copies of this document are not considered signed and sealed and the signature must be verified on any electronic copies.

8/25/2026 9:30 AM

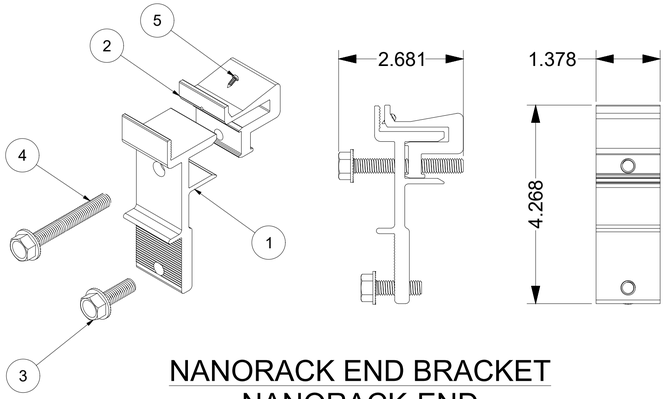

NANORACK END BRACKET
NANORACK-END

ITEM	PART NUMBER	DESCRIPTION	MATERIAL
5	B10067-001	SELF-TAPPING SCREW M2.2X6.5	304, 305 OR 316 SST
4	B10063-005	SERRATED-FLANGE HEX HEAD SCREW M8X60	304, 305 OR 316 SST
3	B10063-001	SERRATED-FLANGE HEX HEAD SCREW M8X25	304, 305 OR 316 SST
2	A20532-001	NANORACK MODULE CLAMP BASE	ALUMINUM 6061
1	A20528-001	NANORACK END CLAMP	ALUMINUM 6061

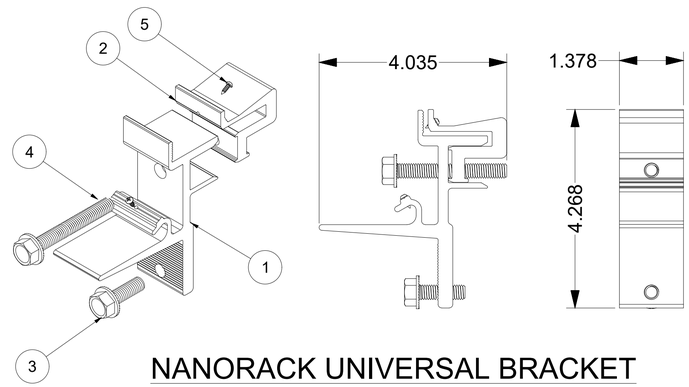

NANORACK UNIVERSAL BRACKET
NANORACK-END

ITEM	PART NUMBER	DESCRIPTION	MATERIAL
5	B10067-001	SELF-TAPPING SCREW M2.2X6.5	304, 305 OR 316 SST
4	B10063-005	SERRATED-FLANGE HEX HEAD SCREW M8X60	304, 305 OR 316 SST
3	B10063-001	SERRATED-FLANGE HEX HEAD SCREW M8X25	304, 305 OR 316 SST
2	A20532-001	NANORACK MODULE CLAMP BASE	ALUMINUM 6061
1	A20529-001	NANORACK MID CLAMP	ALUMINUM 6061

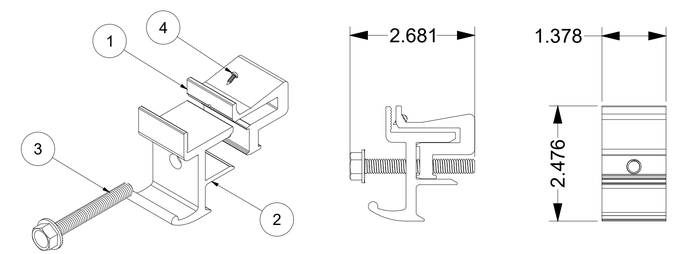

NANORACK MODULE HOOK KIT
NANORACK-HOOK

ITEM	PART NUMBER	DESCRIPTION	MATERIAL
4	B10067-001	SELF-TAPPING SCREW M2.2X6.5	304, 305 OR 316 SST
3	B10063-005	SERRATED-FLANGE HEX HEAD SCREW M8X60	304, 305 OR 316 SST
2	A20533-001	NANORACK MODULE HOOK BASE	ALUMINUM 6061
1	A20532-001	NANORACK MODULE CLAMP BASE	ALUMINUM 6061

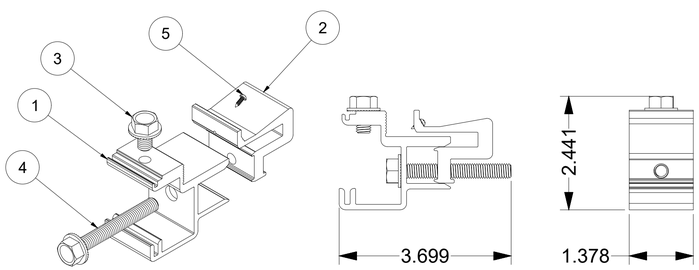

NANORACK SKIRT ATTACHMENT CLAMP
NANORACK-END

ITEM	PART NUMBER	DESCRIPTION	MATERIAL
5	B10067-001	SELF-TAPPING SCREW M2.2X6.5	304, 305 OR 316 SST
4	B10063-005	SERRATED-FLANGE HEX HEAD SCREW M8X60	304, 305 OR 316 SST
3	B10063-004	SERRATED-FLANGE HEX HEAD SCREW M8X12	304, 305 OR 316 SST
2	A20532-001	NANORACK MODULE CLAMP BASE	ALUMINUM 6061
1	A20530-001	NANORACK SKIRT BRACKET	ALUMINUM 6061

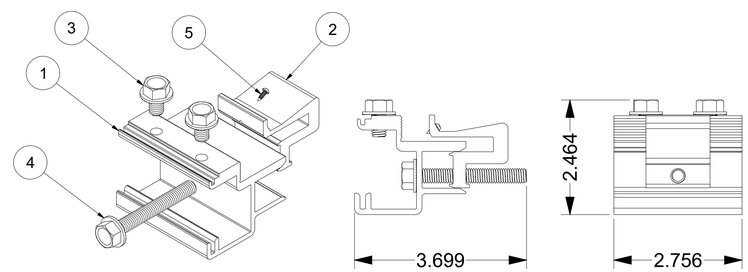

NANORACK SKIRT SPLICE CLAMP

ITEM	PART NUMBER	DESCRIPTION	MATERIAL
5	B10067-001	SELF-TAPPING SCREW M2.2X6.5	304, 305 OR 316 SST
4	B10063-005	SERRATED-FLANGE HEX HEAD SCREW M8X60	304, 305 OR 316 SST
3	B10063-004	SERRATED-FLANGE HEX HEAD SCREW M8X12	304, 305 OR 316 SST
2	A20532-001	NANORACK MODULE CLAMP BASE	ALUMINUM 6061
1	A20530-002	NANORACK SKIRT BRACKET	ALUMINUM 6061

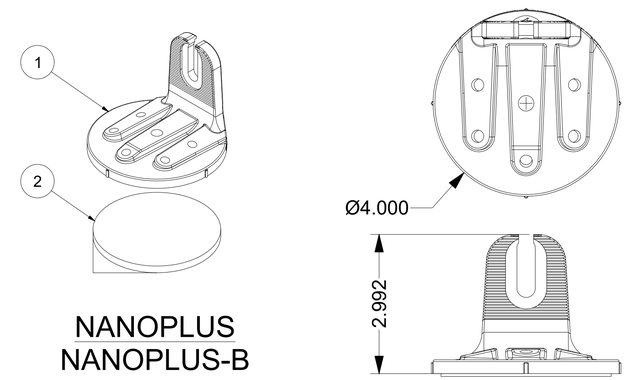

NANOPLUS
NANOPLUS-B

ITEM	PART NUMBER	DESCRIPTION	MATERIAL
2	C50009-XXX	NANO GASKET, NEOPRENE FOAM W/ OPT MASTIC TAPE	RUBBER
1	A50259-BK1	BLACK NANOPLUS MOUNT	ALUMINUM 6061

REV. #	DATE	BY:	DESCRIPTION
1	04/24/24	MIH	NANOPLUS MOUNT

DATE: 8/18/26 ENG: SAW DWN: SAW CHK: JRH

VECTOR ENGINEERS®
DRAPER, UTAH
(801) 990-1775
WWW.VECTORSE.COM

Copyright © 2026
Vector Structural Engineering, LLC
This drawing contains proprietary information belonging to Vector Structural Engineering, LLC. and may be neither wholly nor partially copied or reproduced without the prior written permission of Vector Structural Engineering, LLC.

SUNMODO CORP
NANORACK PV MOUNTING SYSTEM
14800 NE 65TH ST
VANCOUVER, WA 98682

JOEL R. HARTMAN
LICENSE
No. 94174
STATE OF FLORIDA
PROFESSIONAL ENGINEER
08/25/2026
JOEL HARTMAN
LICENSE #: 94174

U2716.0410.261

SHEET 6 OF 7

This item has been digitally signed and sealed by Joel R. Hartman on the date adjacent to the seal. Printed copies of this document are not considered signed and sealed and the signature must be verified on any electronic copies.

8/25/2026 9:30 AM

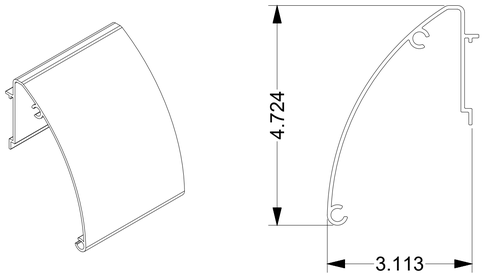

SKIRT
SKIRT-84-B

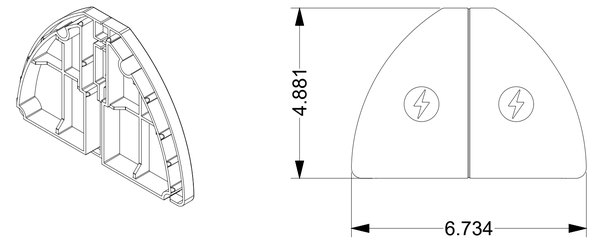

SKIRT END CAP
SKIRT-CAP-B

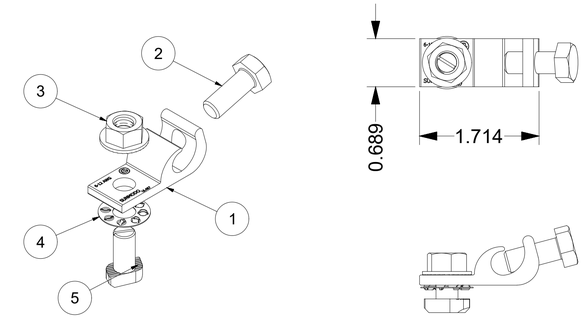

GROUNDING LUG
GRND SMR

ITEM	PART NUMBER	DESCRIPTION	MATERIAL
5	B20053-002	T-BOLT M8 X16	304, 305 OR 316 SST
4	B15086-001	GROUNDING SPACER	304, 305 OR 316 SST
3	B10020-001	FLANGE NUT M8	304, 305 OR 316 SST
2	B10019-001	HEX CAP SCREW M8 X 20	304, 305 OR 316 SST
1	A20462-001	GROUND LUG	BRASS

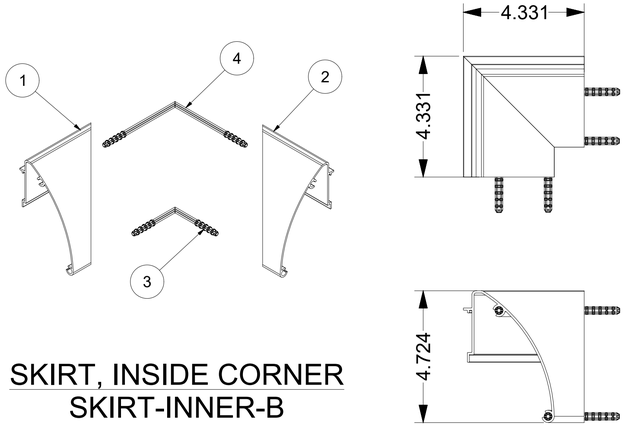

SKIRT, INSIDE CORNER
SKIRT-INNER-B

ITEM	PART NUMBER	DESCRIPTION	MATERIAL
4	C50020-BK2	PLASTIC CORNER DOWEL	PC/ABS PLASTIC
3	C50020-BK1	PLASTIC CORNER DOWEL	PC/ABS PLASTIC
2	A20517-BK2	BLACK SKIRT CONCAVE CORNER-R	ALUMINUM 6061
1	A20517-BK1	BLACK SKIRT CONCAVE CORNER-L	ALUMINUM 6061

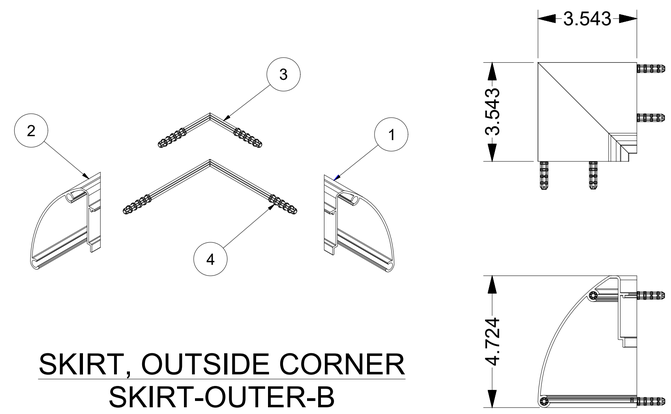

SKIRT, OUTSIDE CORNER
SKIRT-OUTER-B

ITEM	PART NUMBER	DESCRIPTION	MATERIAL
4	C50020-BK2	PLASTIC CORNER DOWEL	PC/ABS PLASTIC
3	C50020-BK1	PLASTIC CORNER DOWEL	PC/ABS PLASTIC
2	A20517-BK4	BLACK SKIRT CONVEX CORNER-R	ALUMINUM 6061
1	A20517-BK3	BLACK SKIRT CONVEX CORNER-L	ALUMINUM 6061

DATE: 8/18/26	ENG: SAW	DWN: SAW	CHK: JRH
REV: #	DATE	BY:	DESCRIPTION
1	04/24/24	MIH	NANOPLUS MOUNT

VECTOR ENGINEERS®
DRAPER, UTAH
(801) 990-1775
WWW.VECTORSE.COM

Copyright © 2026
Vector Structural Engineering, LLC
This drawing contains proprietary information belonging to Vector Structural Engineering, LLC. and may be neither wholly nor partially copied or reproduced without the prior written permission of Vector Structural Engineering, LLC.

SUNMODO CORP
NANORACK PV MOUNTING SYSTEM
14800 NE 65TH ST
VANCOUVER, WA 98682

JOEL R. HARTMAN
LICENSE
No. 94174
STATE OF FLORIDA
PROFESSIONAL ENGINEER
08/25/2026
JOEL HARTMAN
LICENSE #: 94174

U2716.0410.261

SHEET 7 OF 7

This item has been digitally signed and sealed by Joel R. Hartman on the date adjacent to the seal. Printed copies of this document are not considered signed and sealed and the signature must be verified on any electronic copies.

8/25/2026 9:30 AM